Test Date: 12/07/2020

B
CODE

Aakash
Medical | IIT-JEE | Foundations
(Divisions of Aakash Educational Services Limited)

Regd. Office: Aakash Tower, 8, Pusa Road, New Delhi-110005, Ph.011-47623456

Mock Test_CoE_XII

for JEE (Advanced) – 2020

Test – 2A (Paper – II)_Actual Pattern-2015

ANSWERS

PHYSICS		CHEMISTRY		MATHEMATICS	
1.	(4)	21.	(8)	41.	(6)
2.	(1)	22.	(4)	42.	(1)
3.	(4)	23.	(4)	43.	(0)
4.	(5)	24.	(7)	44.	(4)
5.	(3)	25.	(5)	45.	(0)
6.	(2)	26.	(1)	46.	(5)
7.	(2)	27.	(4)	47.	(2)
8.	(1)	28.	(5)	48.	(7)
9.	(A, C, D)	29.	(A, B, C, D)	49.	(A, B, C, D)
10.	(A, C)	30.	(A, C)	50.	(B)
11.	(A, B, C)	31.	(A, C, D)	51.	(A, B)
12.	(A, C)	32.	(A, B, C, D)	52.	(B, C)
13.	(A, C)	33.	(A, D)	53.	(A, C)
14.	(A, C)	34.	(A, B, C)	54.	(A, C)
15.	(A, D)	35.	(A, B, C, D)	55.	(A, C, D)
16.	(A, C)	36.	(A, C)	56.	(A, C)
17.	(A, C)	37.	(A, C)	57.	(A)
18.	(A, D)	38.	(B, D)	58.	(B)
19.	(A, C)	39.	(C)	59.	(B)
20.	(A, C)	40.	(D)	60.	(C)

Test Date: 12/07/2020

Aakash
Medical | IIT-JEE | Foundations
(Divisions of Aakash Educational Services Limited)

B
CODE

Regd. Office: Aakash Tower, 8, Pusa Road, New Delhi-110005, Ph.011-47623456

Mock Test_CoE_XII
for JEE (Advanced) – 2020
Test – 2A (Paper – II)_Actual Pattern-2015
ANSWERS & SOLUTIONS

PART –I : Physics

1. Answer (4)

$\vec{F_m} = q\left(\vec{V} \times \vec{B}\right)$

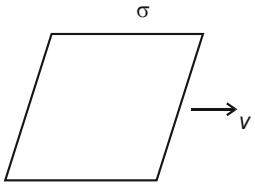

Also 2Bl = (μ_0) (σVl)

$\Rightarrow B = \left(\frac{\mu_0 \sigma V}{2}\right), V = at_0$

$\Rightarrow B = \left(\frac{\mu_0 \sigma}{2}\right)\left(\frac{g}{2}t_0\right)$

$\Rightarrow F = BV_0 q = \left(\frac{\mu_0 \sigma g t_0}{4}\right)(V_0)q$

2. Answer (1)

After passing through prism light rays suffer zero path different as if falls normally on prism

$\Delta x = \mu QR - PS$

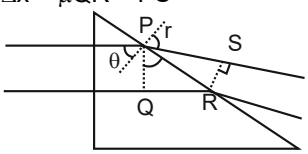

since $\mu \sin\theta = 1 \sin r$

$\Rightarrow \mu QR = PS \Rightarrow \Delta x = 0$ (by geometry)

Hence $I_P = I_{min}\left(y = \frac{\beta}{2}\right)$

$= \left(\sqrt{I_1} - \sqrt{I_2}\right)^2 = I_0$

3. Answer (4)

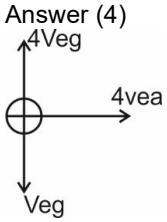

$a_x = 3a$, $a_y = 3g$

since $a = 2g$

$\Rightarrow a_x = 2a_y$

$\Rightarrow$ y = 4m

4. Answer (5)

$Mg - N_A = ma_{cm}$

$a_{cm} = \left(\frac{1}{2}\right)\alpha$

Also $mg\frac{l}{2} = I\alpha$

$\Rightarrow \alpha = \frac{3g}{2l} \Rightarrow N_A = \frac{mg}{4} = 5N$

5. Answer (3)

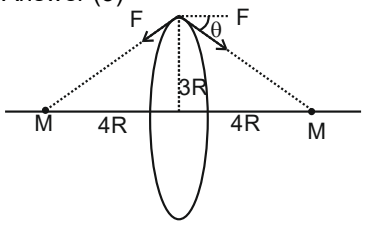

$F = \frac{GMm}{\left(R^2 + x^2\right)}$

$\sum Fy = 2F\sin\theta = \frac{mv^2}{(3R)}$

$\Rightarrow \frac{mv^2}{3R} = (2R)\frac{3GMm}{\left(25R^2\right)^{3/2}}$

On solving $V = \sqrt{\frac{18GM}{125R}}$

$V = \sqrt{k\left(\frac{6GM}{125R}\right)} \Rightarrow K = 3$

6. Answer (2)

$\frac{Q}{t} \alpha K$ or $K \alpha \frac{1}{t}$

$\therefore \frac{K_1}{K_2} = \frac{40}{20} = 2:1$

$\Rightarrow$ K = 1

7. Answer (2)

$\frac{T}{T'} = \sqrt{\frac{g'}{g}} = \sqrt{1-\frac{d}{D}} = \sqrt{1-\frac{1}{S}}$

$\Rightarrow \frac{1}{S} = \frac{1}{2} \Rightarrow S = 2$

8. Answer (1)

$U = \frac{nfRT}{2}$

For O_2 & N_2 , f = 5, Hence ratio will be 1

9. Answer (A, C, D)

For P_{max} in R , R = r

$\Rightarrow R = 2, I = \frac{V}{R_{eq}} = \frac{20}{4} = 5A$

$I_{6\Omega} = \frac{1}{3}I, I_{Ammt} = \frac{2}{3}I = \frac{10}{3}A$

10. Answer (A, C)

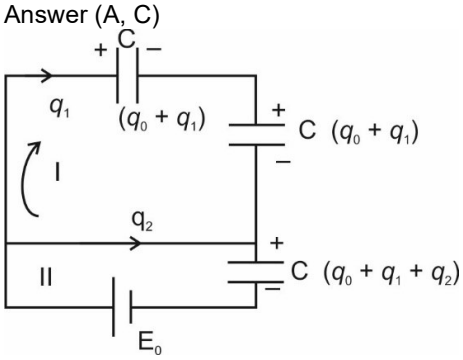

Apply KVL in I and II

$+\frac{(q_0+q_1)}{C} + \frac{(q_0+q_1)}{C} = 0$ ….(i)

$-E_0 + \frac{(q_0+q_1+q_2)}{C} = 0$ ….(ii)

Solve the equation for q_1 and q_2 $q_0 = \left(\frac{CE_0}{3}\right)$

Work done by the battery will

$W_{batt} = E_0 (q_1 + q_2)$

11. Answer (A, B, C)

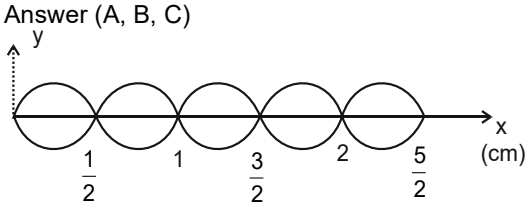

λ = 1 cm

$x_1 = \frac{1}{8}$ and $x_2 = \frac{9}{4}cm$

$\Delta\phi = 0$

At $x = \frac{1}{4}$, then is antinode

12. Answer (A, C)

Image	M-1	M-2
I	10	20
II	50	40
III	70	80
IV	110	100
V	130	140
VI	170	160

13. Answer (A, C)

$\frac{1}{\lambda} = RZ^2\left(\frac{1}{n_1^2} - \frac{1}{n_2^2}\right)$

$= (R)(3)^2\left(\frac{1}{9} - \frac{1}{16}\right)$

$\Rightarrow \lambda \simeq 2\times10^{-7}$ m

$K = \frac{hC}{\lambda} - \phi \Rightarrow \phi = \frac{hC}{\lambda} - K_{max}$

$K_m = \frac{1}{2}mv^2$ and $v = \frac{qBr}{m} \Rightarrow v = 1.18\times10^5$ m/s

$\Rightarrow K_{max}$ = 3.96 eV

14. Answer (A, C)

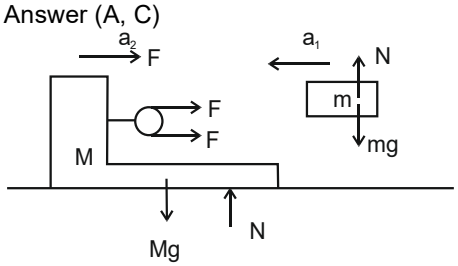

2F = Ma_2 ….(i)

F = ma_1 …(ii)

$a_r = a_1 + a_2 = \frac{2F}{M} + \frac{F}{m}$

$l = \frac{1}{2}a_r t^2 \Rightarrow t = \sqrt{\frac{2l}{a_r}}$

$\Rightarrow t = \sqrt{\frac{2Mml}{(2m+M)F}} = \sqrt{\frac{(2)(4m)(m)(2)}{(6m)(mg)}} = \sqrt{\frac{8}{30}} = \sqrt{\frac{4}{15}}$

15. Answer (A, D)

$v = 10\sqrt{x}$

$\frac{dx}{dt} = 10\sqrt{x} \Rightarrow \int_0^x \frac{dx}{\sqrt{x}}dx = 10\int_0^t dt$

$\Rightarrow x = 25t^2$

$\frac{d^2x}{dt^2} = a = 50$

16. Answer (A, C)

For wave function y must be bounded function and y must be defined at all time $\forall$ **X** also

17. Answer (A, C)

18. Answer (A, D)

Solution for Q17 and Q18

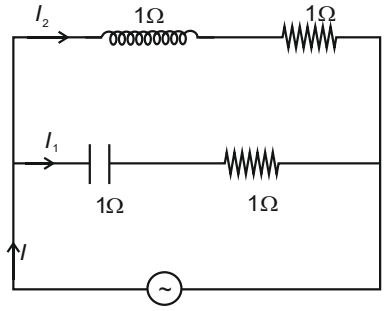

$$I_1 = \frac{100}{\sqrt{2}} = 50\sqrt{2}\text{ A}$$

$$I_2 = \frac{100}{\sqrt{2}} = 50\sqrt{2}A$$

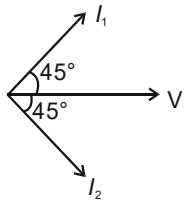

$$I = \sqrt{I_1^2 + I_2^2}$$

$$= \sqrt{\left(50\sqrt{2}\right)^2 + \left(50\sqrt{2}\right)^2}$$

$$= \left(50\sqrt{2}\right)\sqrt{2} = 100\text{ A}$$

function must be in the form of y = f(ax ± bt)

19. Answer (A, C)

20. Answer (A, C)

Solution for Q19 and Q20

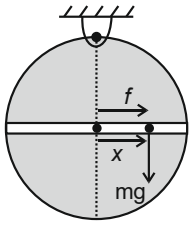

Since a = 0

$\Rightarrow \tau = 0$

$\Rightarrow$ mgx = $f\,R$

$$\Rightarrow f = \frac{mgx}{R}$$

$$\Rightarrow a = \frac{g}{R}\text{ x}$$

$$\Rightarrow T = 2\pi\sqrt{\frac{R}{g}} = (2\pi)\frac{1}{\pi} = 2\text{ sec}$$

$$V_m = A\omega = (1)\sqrt{\frac{g}{R}} = \pi\text{ m/s}$$

PART –II : CHEMISTRY

21. Answer (8)

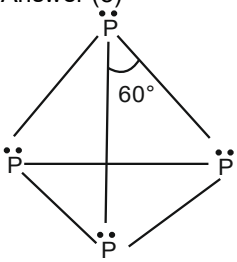

Vertex angles (x) = 12
Lone pairs (y) = 4
P – P bonds (z) = 6
Thus Value of $\frac{x.y}{z} \Rightarrow \frac{12 \times 4}{6} = 8$

22. Answer (4)
Ammonium Salts of carboxylic acids on heating undergo dehydration to form amides. Only those ammonium salts whose anions are non-oxidizing in nature on heating evolves NH_3 gas. Ex. NH_4Cl, $(NH_4)_2CO_3$, $(NH_4)_2S$ and $(NH_4)_2SO_4$, NH_3 gas is partially oxidized to N_2 by the H_2SO_4 on heating

23. Answer (4)

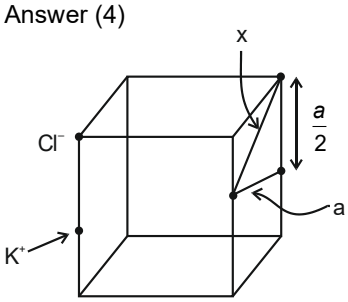

$$x^2 = \left(\frac{a}{2}\right)^2 + (a)^2 \therefore x = \frac{\sqrt{5}\,A}{2}$$

1 Cl^- attached with $3K^+$ ions in one cube & one corner is common in 8 cube thus value of P = 24 & $\frac{P}{6} \Rightarrow \frac{24}{6} = 4$

24. Answer (7)

$P_S = 100 - 50X_B$

If $X_A = 0$; $X_B = 1 \therefore P_S = P_B^\circ = 50$

If $X_B = 0$; $X_A = 1 \therefore P_S = P_A^\circ = 100$

$$P_A = P_A^\circ . X_A \;\&\; y_A = \frac{P_A}{P_T} \Rightarrow y_A = \frac{P_A^\circ . X_A}{P_T}$$

$$\Rightarrow \frac{4}{7} = \frac{100X_A}{P_A^\circ X_A + P_B^\circ X_B} \quad \ldots(i)$$

$$y_B = \frac{P_B^\circ . X_B}{P_T} \Rightarrow \frac{3}{7} = \frac{50X_B}{P_A^\circ X_A + P_B^\circ X_B} \quad \ldots(ii)$$

From (i) & (ii)

$$\frac{y_A}{y_B} = \frac{4/7}{3/7} = \frac{2x_A}{x_B} \therefore \frac{x_A}{x_B} = \frac{2}{3}$$

So $x_A = \frac{2}{5}$ & $x_B = \frac{3}{5}$

$$P_S = P_A^\circ . x_A + P_B^\circ . x_B \Rightarrow \left(100 \times \frac{2}{5}\right) + \left(50 \times \frac{3}{5}\right) \Rightarrow 70$$

So 10x = 70 $\therefore$ x = 7

25. Answer (5)

$$N_2O_5 \rightarrow \underset{\substack{sp \\ 180^\circ}}{[NO_2]^+} \underset{\substack{sp^2 \\ 120^\circ}}{[NO_3]^-}$$

$$Cl_2O_6 \rightarrow \underset{\substack{sp^2 \\ \angle 120^\circ}}{[ClO_2]^+} \underset{\substack{sp^3 \\ 109^\circ 28'}}{[ClO_4]^-}$$

$$PCl_5 \rightarrow \underset{\substack{sp^3 \\ 109^\circ 28'}}{[PCl_4]^+} \underset{\substack{sp^3d^2 \\ 90^\circ}}{[PCl_6]^-}$$

$$I_2Cl_6 \rightarrow \underset{\substack{sp^3 \\ \angle 109^\circ 28'}}{[ICl_2]^+} \underset{\substack{sp^3d^2 \\ 90^\circ}}{[ICl_4]^-}$$

$$XeF_6 \rightarrow \underset{\substack{sp^3d^2 \\ \angle 90^\circ}}{[XeF_5]^+} F^-$$

$$PBr_5 \rightarrow \underset{sp^3}{[PBr_4]^+} \underset{(109^\circ 28')}{Br^-}$$

x = 4, y = 3, z = 4

$\therefore$ x – y + z = 5

26. Answer (1)

$H_2(g) \longrightarrow 2H^+(aq.) + 2e^- \quad -E^\circ = -0.00$ V

$2e^- + 2Ag^+(aq.) \longrightarrow 2Ag(s) \quad E^\circ = 0.80$ V

$H_2(g) + 2Ag^+(aq) \longrightarrow 2H^+(aq) + 2Ag(s) E^\circ = 0.80V$

Apply Nearnst equation:

$$E = E^\circ - \frac{0.059}{n}\log Q \Rightarrow E^\circ - \frac{0.059}{n}\log\frac{[H^+]^2}{[Aq^+]^2}$$

$$0.45 \text{ V} = 0.8 \text{ V} - \frac{0.059}{2}\log\frac{1}{[Ag^+]^2}$$

$$\therefore [Ag^+] = 10^{-5.91} \Rightarrow 1.224 \times 10^{-6} M$$

K_{SP}, Using $[SCN^-]$ = 0.10 M

$K_{SP} = [Ag^+][SCN^-] = 1.124 \times 10^{-6} \times 0.1$

$\Rightarrow 1.2 \times 10^{-7} \simeq 1 \times 10^{-7}$

27. Answer (4)

$C = b^2 = 4 \times 10^{-4} \Rightarrow b = 0.02$ L/mol

$$B = b - \frac{a}{RT} \Rightarrow -0.105 = 0.02 - \frac{a}{0.08 \times 400}$$

$\therefore$ a = 4 atm L^2/mol^2

28. Answer (5)

X = 5 (A, C, E, F) β – Hydroxy Carbonyl is aldol product

Y = 1 (only G) stronger acid than H_2CO_3

29. Answer (A, B, C, D)

$$Xe + F_2 \xrightarrow{1:20} XeF_6 \xrightarrow{H_2O} XeOF_4 \xrightarrow{H_2O} XeO_2F_2 \xrightarrow{H_2O} XeO_3$$

	Geometry	Oxide. State(Xe)	L.P @Xe	No of covalent bond
XeF_6	distorted oh.	+6	1	6
$XeOF_4$	Sq. pyramidal	+6	1	6
XeO_2F_2	See-Saw	+6	1	6

30. Answer (A, C)

(A) $MnO_2 + 4HCl \longrightarrow MnCl_2 + Cl_2 + 2H_2O$

(B) Decomposition of acidic $KMnO_4$ is catalysed by sunlight

$$4MnO_4^- + 4H^+ \longrightarrow 4MnO_2 + 2H_2O + 3O_2$$

(C) $2K_2MnO_4 + H_2O \rightarrow \underset{\text{Purple}}{2KMnO_4} + \underset{\text{Brown}}{MnO_2(\downarrow)} + 4KOH$

(D) $KMnO_4$ also acts as an oxidising agent in alkaline Medium

$MnO_4^- + 2H_2O + 3e^- \rightarrow 2MnO_2 + 4OH^-; E^\circ = +1.23V$

31. Answer (A, C, D)

$\Delta E = W = nC_v\Delta T = 1 (C_p - R) \Delta T$

= 1(28.2 × 8.314) (–30) = –597J

$\therefore$ W = –597 J Thus option (B) is wrong

$\Delta H = nC_P\Delta T = 28.2(-30) = -846J$

$$\Delta S_{sys} = nC_p \ln\left(\frac{T_2}{T_1}\right) - nR\ln\left(\frac{P_2}{P_1}\right)$$

$$= 28.2 \ln\left(\frac{90}{120}\right) - 8.314 \ln\left(\frac{1}{4}\right)$$

= – 8.11 + 11.526

= 3.416 JK^{-1}

$\Delta S_{Surr} = 0$

32. Answer (A, B, C, D)

All are correct

33. Answer (A, D)

$M \underset{\sigma}{\overset{\pi}{\rightleftharpoons}} L$ In metal carbonyl complexes C – O bond length increases compared to that in CO molecule as filled 'd' orbital of metal atom overlaps with π-antibonding M.O of CO $[CrCl_3(H_2O)_3].3H_2O$ is not hydrate isomer of $[Cr(H_2O)_6]Cl_3$.

Facial and meridional isomers of $[Ma_3b_3]^{\pm n}$ complexes are optically inactive as each contains plane of symmetry

34. Answer (A, B, C)

Statement A, B and C are corret

35. Answer (A, B, C, D)

$$K = \frac{B_e}{A_e} = \frac{1.6}{0.4} = 4; K = \frac{K_1}{K_2} = \frac{4\times10^{-2}}{K_2} \therefore K_2 = 10^{-2}$$

$$t_{0.5}x_e = \frac{1}{K_1 + K_2}\ln\frac{x_e}{x_e - x}$$

$$\Rightarrow \frac{1}{5\times10^{-2}}\ln 2 = \frac{70}{2}; t_{0.5}x_e = 14 \text{ sec}$$

$$t_{0.1a} = \frac{1}{5\times10^{-2}}\ln\frac{x_e}{x_e - x}$$

$$\Rightarrow \frac{1}{5\times10^{-2}}\ln\frac{1.6}{1.6-0.2} \Rightarrow \frac{100}{5}\ln\frac{16}{14}$$

$\Rightarrow 20 \times 0.14 \Rightarrow 2.8$

36. Answer (A, C)

Given is : En $\rightarrow$ E_2 = 10.2 + 17 = 27.2 eV …(i)

En $\rightarrow$ E_3 = 4.25 + 5.95 = 10.2 eV …(ii)

From (i) & (ii) we get $E_3 \rightarrow E_2 = 17$

$$\Rightarrow -\frac{13.6z^2}{9} + \frac{13.6z^2}{4} = 17 \therefore z^2 = 9 \text{ \& } z = 3$$

Place Z = 3 in (i)

$$\Rightarrow -\frac{13.6z^2}{x^2} + \frac{13.6z^2}{4^2} = 27.2 \therefore \frac{1}{x^2} = 0.028$$

$x = 6$

Visible region (Li^{+2})

37. Answer (A, C)

38. Answer (B, D)

Solution for Q37 and Q38

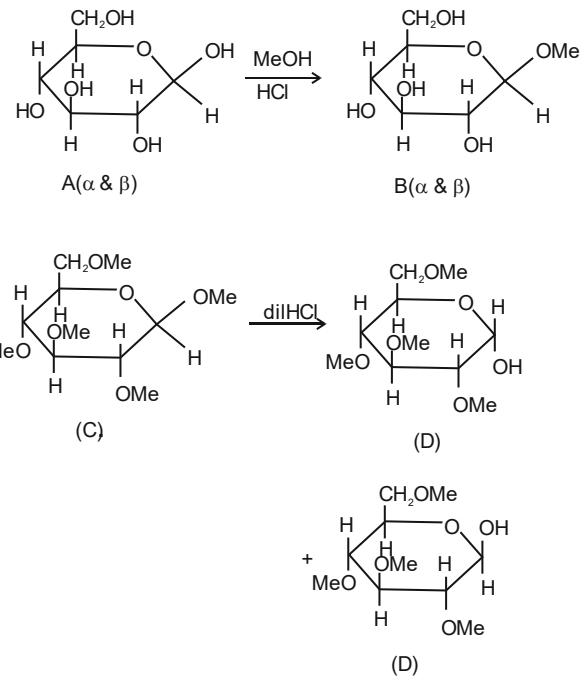

39. Answer (C)

L.E gives violet colour which confirm presence of Sulphur

$Na_2S + Na_2[Fe(CN)_5NO] \rightarrow Na_4[Fe(CN)_5NOS]$ and formation of Prussian blue colour confirms presence of Nitrogen. Since L.E doesn't gives red complex, it means excess of Na metal is present which causes dissociation

$$\left[2Na + NaSCN \xrightarrow{\Delta} Na_2S + NaCN\right]$$

40. Answer (D)

Step I Volume at STP:

$$\frac{P_1V_1}{T_1} = \frac{P_2V_2}{T_2} \Rightarrow V_2 = \frac{273\times700\times50}{300\times760}$$

$\therefore V_2 = 41.9 \text{ cm}^3$

$\therefore$ Wt. of 41.9 cm^3 of N_2 at STP = $\frac{28}{22400}\times41.9$

$\Rightarrow 0.052375$ gm

Percentage of N_2 in 0.3 g O.C = $\frac{0.052375}{0.3}\times100$

$= 17.4583\%$

PART –III : Mathematics

41. Answer (6)

$\sin^3 x = 3\sin x - 4\sin^3 x$

$$\Rightarrow \sin^3 x = \frac{1}{4}\left(3\sin x - \sin^3 x\right)$$

Let $x = \frac{P}{3^n}$

$$\Rightarrow \sin^3\left(\frac{P}{3^n}\right) = \frac{1}{4}\left(3\sin\frac{P}{3^n} - \sin\frac{P}{3^{n-1}}\right)$$

$$\Rightarrow 3^{n-1}\sin^3\left(\frac{P}{3^n}\right) = \frac{1}{4}\left(3^n\sin\frac{P}{3^n} - 3^{n-1}\sin\frac{P}{3^{n-1}}\right)$$

Now

$$\left[S = \sum_{n=1}^{n} 3^{n-1}\sin^3\left(\frac{P}{3^n}\right) = \frac{1}{4}\right]$$

$$\begin{bmatrix} 3\sin\frac{P}{3} - \sin P \\ +3^2\sin\left(\frac{P}{3^2}\right) - 3\sin\left(\frac{P}{3}\right) \\ +3^n\sin\left(\frac{P}{3^n}\right) - 3^{n-1}\sin\left(\frac{P}{3^{n-1}}\right) \end{bmatrix}$$

$$\Rightarrow S = \frac{1}{4}\left[3^n\sin\left(\frac{P}{3^n}\right) - \sin P\right]$$

$$\Rightarrow S = \frac{1}{4}\left[\frac{\sin\left(\frac{P}{3^n}\right)}{\left(\frac{1}{3^n}\right)} - \sin P\right]$$

$$\Rightarrow S_\infty = \frac{1}{4}(P - \sin P)$$

For P = 2022, $F_{3^n} = \frac{674}{3^{n-1}}$

$$\Rightarrow S_\infty = \frac{2022}{4} - \frac{\sin 2022}{4}$$

$$= \frac{1011}{2} - \frac{\sin(2022)}{4}$$

$$\Rightarrow |a| = \frac{1}{2} \quad |b| = \frac{1}{4}$$

$$\Rightarrow \frac{1}{|a|} + \frac{1}{|b|} = 6$$

42. Answer (1)

Angle between two faces of a regular tetrahedron is $\cos^{-1}\frac{1}{3}$

$$\Rightarrow \frac{1}{3} = \frac{4}{9} - \frac{4}{9}a + \frac{4}{9}a^2 .....$$

$$\Rightarrow \frac{1}{3} = \frac{\frac{4}{9}}{1+a}$$

$$\Rightarrow a + 1 = \frac{4}{3}$$

$$\Rightarrow a = \frac{1}{3}$$

Now $\cot^{-1} a + \cot^{-1}\frac{a}{1-a} + \cot^{-1} 3a$

$$= \cot^{-1}\frac{1}{3} + \cot^{-1}\frac{\frac{1}{3}}{1-\frac{1}{3}} + \cot^{-1} 1$$

$$= \cot^{-1}\frac{1}{3} + \cot^{-1}\frac{1}{2} + \cot^{-1} 1$$

$$= \tan^{-1} 3 + \tan^{-1} 2 + \tan^{-1} 1$$

$$= -\tan^{-1}\left(\frac{3+2}{1-6}\right) + \pi + \tan^{-1} 1$$

$$= -\tan^{-1} 1 + \pi + \tan^{-1} 1$$

$$= \pi \Rightarrow n = 1$$

43. Answer (0)

$y(x^2 + (y+1)^2\,dx + x(x+1)dy = (x+1)(y+1)(xdx + ydy + dx + d)y$

$$\Rightarrow y\left(x^2 + (y+1)^2\right)dx - \left(x - (x+1) + x(x+1)dy\right)$$

$$= (x+1)(y+1)\left((x+1)dx + (y+1)dy\right)$$

$$\Rightarrow \left((x+1)^2(y+1)dx - x(x+1)^2\,dy\right) + (y+1)^2$$

$$\left((x+1)dy - ydx\right) + x^2\left((x+1)dy - ydx\right) = 0$$

$$(x+1)^2\left((y+1)dx - xdy\right) + \left((y+1)^2 + x2\right)$$

$$\left((x+1)dy - ydx\right) = 0$$

$$\Rightarrow \frac{(y+1)dx - xdy}{(y+1)^2 + x^2} + \frac{(x+1)dy - ydx}{(x+1)^2} = 0$$

$$\Rightarrow d\left(\tan^{-1}\left(\frac{x}{y+1}\right)\right) + d\left(\frac{y}{x+1}\right) = 0$$

On integrating

$$\Rightarrow \tan^{-1}\left(\frac{x}{y+1}\right) + \frac{y}{x+1} = C \quad \text{...(i)}$$

$\because$ the curve passes through (0,0)

$\Rightarrow C = 0$

$$\Rightarrow \tan^{-1}\left(\frac{x}{y+1}\right)+\frac{y}{x+1}=0 \quad \ldots(ii)$$

a,b $\rightarrow$ equation (ii)

$$\Rightarrow \tan^{-1}\left(\frac{a}{b+1}\right)+\frac{b}{a+1}=0$$

$$\Rightarrow \tan^{-1}1+\frac{b}{a+1}=0$$

$$\Rightarrow \frac{b}{a+1}=-\frac{\pi}{4}$$

$$\Rightarrow \frac{b}{b+2}=-\frac{\pi}{4}$$

$$\Rightarrow \frac{b+2}{b}=-\frac{\pi}{4}\Rightarrow b=-\frac{2\pi}{\pi+4}$$

$$\Rightarrow a=\frac{4-\pi}{\pi+4}$$

Now $\left[\left|\frac{a}{b}\right|\right]=\left[\frac{4-\pi}{2\pi}\right]=0$

44. Answer (4)

$$I=\int\frac{\left(x^7+x^4\right)dx}{x^{10}+\left(x^{10}+4+25x^6+20x^3+10x^8+4x^5\right)}=$$

$$\int\frac{\left(x^7+x^4\right)dx}{x^{10}+\left(x^5+2+5x^3\right)^2}$$

$$=\int\frac{\left(x^{-3}+x^{-6}\right)dx}{1+\left(\frac{x^5+2+5x^3}{x^5}\right)^2}$$

$$=\int\frac{\left(x^{-3}+x^{-6}\right)dx}{1+\left(1+2x^{-5}+5x^{-2}\right)^2}$$

Now $1 + 2x^{-5} + 5x^{-2} = 6$

$\Rightarrow -10(x^{-6} + x^{-3})\,dx = dt$

$\Rightarrow (x^{-6} + x^{-3})dx = -\frac{1}{10}dt$

$$\Rightarrow I=-\frac{1}{10}\int\frac{dt}{1+t^2}=-\frac{1}{10}\tan^{-1}t+k$$

$$\Rightarrow I=-\frac{1}{10}\tan^{-1}\left(1+2x^{-5}+5x^{-2}\right)+k$$

$$=-\frac{1}{10}\tan^{-1}\left(\frac{x^5+5x^3+2}{x^5}\right)+k$$

$\because x > 0$

$$\Rightarrow I=-\frac{1}{10}\cot^{-1}\left(\frac{x^5}{x^5+5x^3+2}\right)+k$$

On comparing with given condition

a = –10 and $f(x) = x^5 + 5x^3 + 2$

Now $\left|\frac{2\times 20}{10}\right|=4$

45. Answer (0)

Case 1- For $x\in\left(0,\frac{\pi}{2}\right)$

[sinx] and [cosx] will always be 0

$\Rightarrow 3^{[\sin x]}$ and $5^{[\cos x]}$ will always be 1

$\Rightarrow$ L.H.S $\neq$ R.H.S

Case 2

For $x\in\left(\frac{\pi}{2},\pi\right)$

[sinx] = 0

$\Rightarrow 3^{[\sin x]} = 1$

$\Rightarrow$ L.H.S > 1

Case 3-

$x\in\left(\pi,\frac{3\pi}{2}\right)$

Minimum value of [tanx] = 0

$\Rightarrow 2^{[\tan x]} = 1$ is minimum for $2^{[\tan x]}$

$\Rightarrow$ L.H.S > R.H.S

Hence no solution from all the cases

46. Answer (5)

$$f(x)=\begin{vmatrix} x^2+x+1 & x+x+x & x+1+1 \\ x+x+x & 1+x^2+x & 1+x+1 \\ x^2+x+x & x+x^2+x & x+x+1 \end{vmatrix}$$

$$=\begin{vmatrix} x & 1 & 1 \\ 1 & x & 1 \\ x & x & 1 \end{vmatrix}\begin{vmatrix} x & 1 & 1 \\ 1 & x & 1 \\ x & x & 1 \end{vmatrix}$$

$$=\begin{vmatrix} x & 1 & 1 \\ 1 & x & 1 \\ x & x & 1 \end{vmatrix}^2$$

$= ((x - 1)^2)^2 = (x - 1)^4$

$$A=\int_0^1(x-1)^4dx$$

$$=\left.\frac{(x-1)^5}{5}\right|_0^1=\frac{1}{5}$$

Now S = 1 + 2A + 3A² + …..∞

AS = A + 2A² + …..∞

⇒ S(1 – A) = 1 + A + A² + …. ∞

$$\Rightarrow S(1-A)=\frac{1}{(1-A)}$$

$$\Rightarrow S=\frac{1}{\left(1-\frac{1}{5}\right)^2}$$

$$\Rightarrow S=\frac{25}{16}$$

$$\Rightarrow \frac{165}{5}=5$$

47. Answer (2)

Consider two parabolas

$P_\alpha : y^2 = 4a_\alpha\left(x-b_\alpha\right)$

$P_\beta : y^2 = 4a_\beta\left(x-b_\beta\right)$

For common tangents for P_α and P_β

$$-b_\alpha m+\frac{a_\alpha}{m}=-b_\beta m+\frac{a_\beta}{m}$$

$$\Rightarrow \left(b_\beta-b_\alpha\right)m=\left(a_\beta-a_\alpha\right)\times\frac{1}{m}$$

$$\Rightarrow m^2=\frac{a_\beta-a_\alpha}{b_\beta-b_\alpha}$$

Suppose x terms are there between a_β and a_α and similarly for b_β and b_α

$$\Rightarrow m^2=\frac{d_1}{d_2}=\frac{1}{2}$$

$$\Rightarrow m=\pm\frac{1}{\sqrt{2}}$$

⇒ two tangents can be drawn

48. Answer (7)

$$z_1\overline{z_2}\times z_2\overline{z_3}\times z_3\overline{z_1}=1\times4\times16$$

$$\Rightarrow |z_1||z_2||z_3|=8 \quad \ldots(i)$$

$$\because |z_1|=2|z_2|=4|z_3|$$

$$\Rightarrow |z_1|\times\frac{|z_1|}{2}\times\frac{|z_1|}{4}=8$$

$\Rightarrow |z_1| = 4$

$\Rightarrow |z_2| = 2$ and $|z_3| = 1$

Now, $$\left|\frac{z_1}{z_2}+\frac{2z_2}{z_3}+\frac{4z_3}{z_1}\right|\le\left|\frac{z_1}{z_2}\right|+2\left|\frac{z_2}{z_3}\right|+4\left|\frac{z_3}{z_1}\right|$$

$$\le 2+2\times2+4\times\frac{1}{4}$$

≤ 7

⇒ Maximum is 7

49. Answer (A, B, C, D)

Given equation can be re-written as

$(\sin^2 a)^3 + (\cos^2 b)^3 + (-1)^3 = 3(\sin a)(\sin b)(-1)$

$\because x^3 + y^3 + z^{3 = 3xyz}$

⇒ x + y + z = 0

$\Rightarrow \sin^2 a + \cos^2 b - 1 = 0$

$\Rightarrow \sin^2 a = \sin^2 b$

$\Rightarrow a = n\pi \pm b$

$\Rightarrow a = \pm b$

$a = \pi \pm b$

$a = 2\pi \pm b$

50. Answer (B)

$$\lim_{t\to1^-}(1-t)\sum_{r=1}^{\infty}t^r\left(1+t^r\right)^{-1}$$

$$=\lim_{t\to1^-}\sum_{r=1}^{\infty}t^r\left(1-t^r+t^{2r}-t^{3r}+\ldots\right)$$

$$=\lim_{t\to1^-}(1-t)\sum_{r=1}^{\infty}\left\{t^r-t^{2r}+t^{3r}+\ldots\right\}$$

$$=\lim_{t\to1^-}\left\{\left(\frac{1-t}{1-t}\right)-t^2\left(\frac{1-t}{1-t^2}\right)+t^3\left(\frac{1-t}{1-t^3}\right)-\ldots\right\}$$

$$=1-\frac{1}{2}+\frac{1}{3}-\frac{1}{4}+\ldots=\ln 2$$

51. Answer (A, B)

Note: $a^2=9, b^2=1, e^2=\frac{8}{9}$

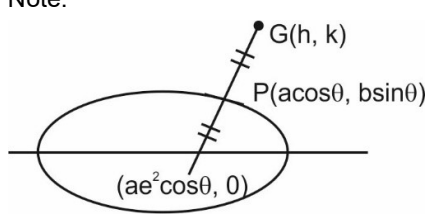

$N\equiv\left(ae^2\cos\theta,0\right)$ …(i)

Let Point $\theta\equiv(h,k)$

$$\Rightarrow \frac{h+ae^2\cos\theta}{2}=a\cos\theta$$

$$\Rightarrow \cos 0=\frac{h}{\left(2a-ae^2\right)} \quad \ldots(ii)$$

Also $\frac{k}{2}=b\sin\theta$

$\Rightarrow \sin\theta = \dfrac{k}{2b}$ …(iii)

From (ii) & (iii)

$\cos^2\theta + \sin^2\theta = 1$

$$\Rightarrow \frac{h^2}{\left(2a - ae^2\right)^2} + \frac{k^2}{4b^2} = 1$$

$$\Rightarrow \frac{x^2}{\left(6 - \frac{8}{3}\right)^2} + \frac{y^2}{4} = 1$$

$$\Rightarrow \frac{x^2}{\left(\frac{10}{3}\right)^2} + \frac{y^2}{4} = 1$$

If e' is the eccentricity

$$\Rightarrow e'^2 = 1 - \frac{4}{100} \times 9 = \frac{16}{25}$$

$$\Rightarrow e' = \frac{4}{9}$$

$\Rightarrow$ Locus of Q will be conic with eccentricity 4/5 *i.e* it is an Ellipse

52. Answer (B, C)

$$A^2 = \begin{bmatrix} 1 & -2 & -6 \\ -3 & 2 & 9 \\ 2 & 0 & -3 \end{bmatrix}\begin{bmatrix} 1 & -2 & -6 \\ -3 & 2 & 9 \\ 2 & 0 & -3 \end{bmatrix}$$

$$= \begin{bmatrix} -5 & -6 & -6 \\ 9 & 10 & 9 \\ -4 & -4 & -3 \end{bmatrix}$$

$\Rightarrow A^2 = B^T$ …(i)

$$A^3 = \begin{bmatrix} -5 & -6 & -6 \\ 9 & 10 & 9 \\ -4 & -4 & -3 \end{bmatrix}\begin{bmatrix} 1 & -2 & -6 \\ -3 & 2 & 9 \\ 2 & 0 & -3 \end{bmatrix}$$

$$= \begin{bmatrix} 1 & -2 & -6 \\ -3 & 2 & 9 \\ 2 & 0 & -3 \end{bmatrix} = A$$

$\Rightarrow A^3 = A$ …(ii)

Now for (i)

$A^2 = BT$

$\Rightarrow A^2 \times (B^T)^{-1} = I$

Also $\because AB^T = A^3 = A$

Now $A^n \times \left(B^T\right)^{n+1} A$

$= A^n \times (BT)^n \times (B^TA)$

$A^n \times \left(B^T\right)^n \times A^3$

$A^n \times \left(B^T\right)^n \times A$

$= A^n \times A$

$= A^{n+1}$

$= A$ if n is multiple of 3

And $\because A^3 = A \Rightarrow$ For n multiple of 3.

$A^n (B^T)^{n+1} A = A^3$

53. Answer (A, C)

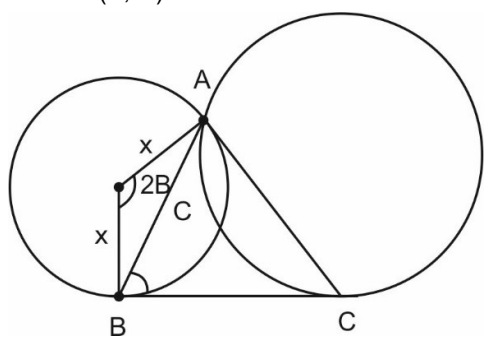

Clearly C = 2x sinB

Similarly b = 2ysinc

$\Rightarrow xy = R^2 \Rightarrow$ R must be integer

Now BC = a = 2RsinA = $\dfrac{R}{2}$

Hence 2BC must be an integer

54. Answer (A, C)

$$f(x) = \left(2^x\right)^2 + (1 - \cos x) - 2^x(1 - \cos x) + \cos^2 x$$

$$= \left(\left(2^x\right)^2 + \cos^2 x + 1\right) - \left(\cos x + 2^x + 2^x \cos x\right)$$

$$= \frac{1}{2}\left(\left(2^x - \cos x\right)^2 + (\cos x - 1)^2 + \left(1 - 2^x\right)^2\right) \quad \ldots(1)$$

$\Rightarrow f(x) \geq 0$ …(2)

Now $f(0) = 0$ …(3)

From (2) , (3)

Minimum value of f(x) occurs at x = 0

Now consider $f(x) + |x| = 0$

$\Rightarrow f(x) = -|x|$

L.H.S ≥ 0 and R.H.S ≤ 0

R.H.S = 0 at only x = 0

$\Rightarrow f(x) + |x| = 0$ has only one solution

55. Answer (A, C, D)

$2ax^2 + 6xy + 2by^2 = 1$ …(i)

P $\rightarrow$ 1

$\Rightarrow 2ar^2\cos^2\theta + 6r^2\sin\theta\cos\theta + 2br^2\sin^2\theta = 1$

$\Rightarrow r^2 = \dfrac{1}{2a\cos^2\theta + 6\sin\theta\cos\theta + 2b\sin^2\theta}$

$\Rightarrow r^2 = \dfrac{1}{a(1+\cos 2\theta) + 3\sin 2\theta + b(1-\cos\theta)}$

$= \dfrac{1}{(a+b)+(a-b)\cos 2\theta + 3\sin 2\theta}$

$(r_{\min})^2 = \dfrac{1}{(a+b)+\sqrt{(a-b)^2+3^2}}$

Now Case 1

(a = 0, b = 4) $e_{\min^2} \dfrac{1}{4+\sqrt{4^2+3^2}}$

$\Rightarrow (r_{\min})^2 = \dfrac{1}{4+5}$

$\Rightarrow r_{\min} = \dfrac{1}{3}$

Case 2

(a = 4, b = 0) $\Rightarrow (r_{\min})^2 = \dfrac{1}{4+\sqrt{4^2+3^2}}$

$\Rightarrow (r_{\min})^2 = \dfrac{1}{9}$

$\Rightarrow r_{\min} = \dfrac{1}{3}$

Case 3

a = 12, b = 8 $\Rightarrow (r_{\min})^2 = \dfrac{1}{20+\sqrt{4^2+3^2}}$

$\Rightarrow r_{\min} = \dfrac{1}{5}$

Case 4

a = 8, b = 12 $\Rightarrow (r_{\min})^2 = \dfrac{1}{20+\sqrt{4^2+3^2}}$

$\Rightarrow r_{\min} = \dfrac{1}{5}$

$\Rightarrow$ A, B, C, D are correct

56. Answer (A, C)

As $t \to 0$ $Nr \to 0$

$\Rightarrow (0+1)^2 + 0 + 0 + C = 0$

$\Rightarrow C = -1$ …(i)

Now

$$L = \lim_{t\to 0} \frac{(t^2+2t+1) - t(1+a)\ln(1+t) + b\sin t - 1}{t^3}$$

$$\Rightarrow L = \lim_{t\to 0} \frac{\left(\dfrac{t^2+2t}{t}\right) - (1+a)\ln(1+t) + \dfrac{b\sin t}{t}}{t^2}$$

As $t \to 0$ $Nr \to 0$

$\Rightarrow b = -2$ …(2)

$$\Rightarrow L = \lim_{t\to 0} \frac{t^2+2t - t(1+a)\ln(1+t) - 2\sin t}{t^3}$$

$$\Rightarrow L = \lim_{t\to 0} \frac{t^2 - t(1+a)\ln(1+t) + 2(t-\sin t)}{t^3} = \frac{1}{6}$$

$$\Rightarrow L = \lim_{t\to 0}\left(\frac{t-(1+a)\ln(1+t)}{t^2}\right) + \lim_{t\to 0}\frac{2(t-\sin t)}{t^3} = \frac{1}{6}$$

$$\Rightarrow L = \left(\lim_{t\to 0}\frac{t-(1+a)\ln(1+t)}{t^2}\right) - \frac{1}{3} = \frac{1}{6}$$

$$\Rightarrow \lim_{t\to 0}\frac{t-(1+a)\ln(1+t)}{t^2} = \frac{1}{3} + \frac{1}{6} = \frac{1}{2}$$

$$\Rightarrow \lim_{t\to 0}\frac{t-(1+a)\ln(1+t)}{t^2} = \frac{1}{2}$$

$$\Rightarrow \lim_{t\to 0}\frac{1-(1+a)\dfrac{\ln(1+t)}{t}}{t} = \frac{1}{2}$$

As $t \to 0$ $Nr \to 0$

$\Rightarrow 1-(1+a) = 0$

$\Rightarrow a = 0$

57. Answer (A)

$f(a) = -1$

$2a^3 - 3a + 1 = 0$

$\Rightarrow a = 1$ ($\because a \in I$) …(i)

Now $b = a\sqrt{1-e^2}$

$\Rightarrow b = \sqrt{1-\dfrac{1}{2}} = \dfrac{1}{\sqrt{2}}$

$b = \dfrac{1}{\sqrt{2}}$, $\left[b\sqrt{2} \text{ is also integer}\right]$

$f'(x) = 0$

$\Rightarrow 6x^2 - 3 = 0$

$\Rightarrow x = \pm\dfrac{1}{\sqrt{2}}$

$\Rightarrow$ radius of circle is $\dfrac{1}{\sqrt{2}}$ …(3)

$\because$ The curves are concentric and semi minor axis = Radius of circle

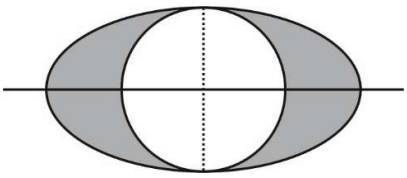

Area bounded = $\pi ab - \pi r^2$

$= \pi (ab - r^2)$

$= \pi\left(\frac{1}{\sqrt{2}} - \frac{1}{2}\right)$

$= \pi\frac{\left(\sqrt{2}-1\right)}{2}$

58. Answer (B)

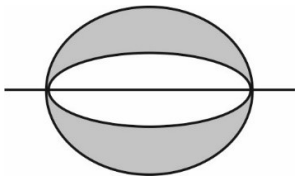

$a_1 = \frac{1}{\sqrt{2}}$

$e' = \frac{1}{\sqrt{2}}$

$\Rightarrow b_1^2 = \frac{1}{2}\left(1 - \frac{1}{2}\right) = \frac{1}{4}$

$\Rightarrow b_1 = \frac{1}{2}$

Now Area bounded = $\pi \times \frac{1}{2} - \frac{\pi}{2\sqrt{2}}$

$= \frac{\left(\sqrt{2}-1\right)\pi}{2\sqrt{2}}$

59. Answer (B)

Given equation can be rewritten as

$\left(x^3 + x\right)dy - \left(x^3 + 2y\right)dx = 2x^2 y dx$

$\Rightarrow x\left(x^2+1\right)dy - \left(2y + 2x^2 y\right)dx = x^3 dx$

$\Rightarrow x\left(x^2+1\right)dy - 2y\left(x^2+1\right)dx = x^3 dx$

$\Rightarrow \frac{dy}{dx} - \frac{2y}{x} = \frac{x^2}{x^2+1}$ …(1)

$I.F = e^{-\int \frac{2}{x}dx} = \frac{1}{x^2}$

$\Rightarrow \frac{d}{dx}\frac{(y)}{x^2} = \frac{1}{x^2+1}$

$\Rightarrow \frac{y}{x^2} = \tan^{-1} x + c$ …(ii)

Now (1, $\pi/4$) …(2)

$\Rightarrow \frac{\pi}{4} = \tan^{-1} 1 + c$

$\Rightarrow c = 0$

$\Rightarrow y = x^2 \tan^{-1} x$

60. Answer (C)

$L = \lim_{x\to 0} \frac{f'(x)}{\left(x^2/2\right)}$

$= \lim_{x\to 0} 2\frac{\left(\frac{x^2}{1+x^2} + 2x\tan^{-1} x\right)}{x^2}$

$\Rightarrow 2 = \lim_{x\to 0} 2\left(\frac{1}{1+x^2} + 2\left(\frac{\tan^{-1} x}{x}\right)\right)$

$= 2(1 + 2)$

$= 6$

❒ ❒ ❒